Addis Ababa Science & Technology University
Department of Physics

General Physics (phys1001)

Chapter - 6

Electromagnetism

Electromagnetism

Electric Charge (Q or q):

- is an inherent property of matter that makes it to have and experience electrical and magnetic characteristics.
- Properties of an electric charge

1. There are two kinds of electric charges in nature
   - negative charge
   - positive charge

2. The interaction of electric charges is governed by the following basic law of electrostatics which states that:
   - Like charges repel each other.
   - Unlike charges attract each other

3. An electric charge is quantized.

- an electric charge always exists in discrete packets
- an electric charge is always observed to occur as an integer multiple of the charge carried by an elementary particle (e), where e = 1.60×10^{-19} coulomb(C) . i.e. Q=ne , Q is total charge and n=……..-3,-2,-1,0,1,2,3……

4. Electric charge is conserved

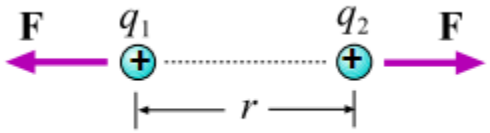

(a) same charge= repel each other

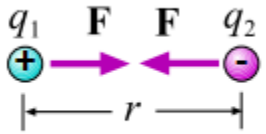

(b) opposite charge= attract each other

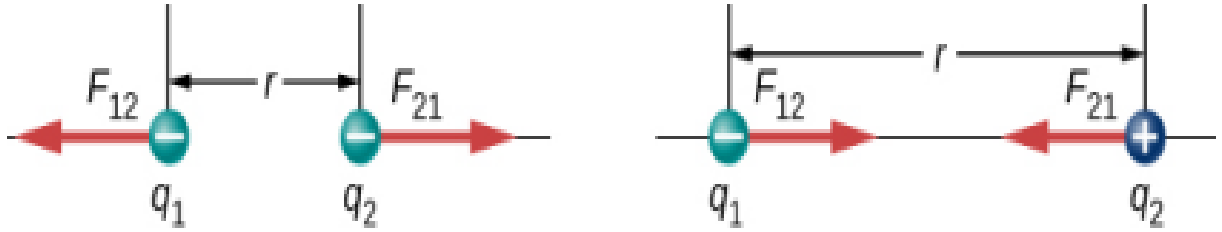

Coulomb's Law:

- States that "If two point charges q_1 and q_2 are separated by a distance ***r***, then the magnitude of the force of repulsion or attraction between them is directly proportional to the product of the magnitude of the charges and inversely proportional to the square the separation ***r*** between them."

$$F = k\frac{|q_1|\,|q_2|}{r^2} \quad \text{where} \quad k = 8.9876 \times 10^9 \ \frac{\text{N}\cdot\text{m}^2}{\text{C}^2}$$

$$= 9.0 \times 10^9 \ Nm^2C^{-2}.$$

OR

$$k = \frac{1}{4\pi\epsilon_0} \quad \text{where} \quad \epsilon_0 = 8.85419 \times 10^{-12} \ \frac{\text{C}^2}{\text{N}\cdot\text{m}^2}$$

where K called the Coulomb constant.

ϵ_0 is called the **permittivity constant**

- The electrostatic force between two stationary charges is directed along the line joining their centers.
- The electrostatic force will be attractive if the charges are opposite in sign and repulsive if two charges are of the same sign.

Superposition Principle (Electric Forces due to system of point charges)

- Considering a system of **N** point charges, the net electric force on one of the charge is simply the vector sum of each individual electric forces exerted on it by each of the individual point charges.

$$\vec{F} = k\sum_{i=1}^{N} \frac{q_i q_0}{r_{i0}^2}\hat{r}_{i0}$$

Example-1. The electron and proton of a hydrogen atom are separated by a distance of approximately $5.3\ x10^{-11}m$. Find the magnitudes of the electric force and the gravitational force between the two particles.

(Given: $e^- = -1.6x10^{-19}, e^+ = +1.6x10^{-19}$, $K = 9x10^9\ \frac{Nm^2}{C^2}$, $m_{e^-} = 9.1x10^{-31}\ kg, m_{e^+} = 1.6x10^{-27}\ kg$

Solution From Coulomb's law, we find that the magnitude of the electric force is

$$F_e = k_e \frac{|e||-e|}{r^2} = (8.99 \times 10^9\ \mathrm{N \cdot m^2/C^2}) \frac{(1.60 \times 10^{-19}\ \mathrm{C})^2}{(5.3 \times 10^{-11}\ \mathrm{m})^2}$$

$$= 8.2 \times 10^{-8}\ \mathrm{N}$$

✓ The magnitude of gravitational force is:

$$F_g = G\frac{m_e m_p}{r^2}$$

$$= (6.67 \times 10^{-11}\ \mathrm{N \cdot m^2/kg^2}) \times \frac{(9.11 \times 10^{-31}\ \mathrm{kg})(1.67 \times 10^{-27}\ \mathrm{kg})}{(5.3 \times 10^{-11}\ \mathrm{m})^2}$$

$$= 3.6 \times 10^{-47}\ \mathrm{N}$$

Example-2

A charged particle *A* exerts a force of 2.62 N to the right on charged particle *B* when the particles are 13.7 mm apart. If the separation distance between them increases to 17.7 mm, what vector force does particle *B* then exert on *A*?

Solution:

By Colum's law the force the particles A and B exerted on each other is given by

$$F = \frac{k_e \,|\, q_B \,\|\, q_A \,|}{r^2}$$

Hence, we can determine the product of the two charges as

$$|\, q_B \,\|\, q_A \,| = \frac{Fr^2}{k_e} = \frac{2.62\,N \times (1.37 \times 10^{-2}\,m)^2}{9.0 \times 10^9\,Nm^2C^{-2}} = 5.44 \times 10^{-14}\,C^2$$

Now we can use this result to determine the force in new position.

$$F = \frac{k_e \,|\, q_B \,\|\, q_A \,|}{r^2} = \frac{9.0 \times 10^9\ Nm^2C^{-2} \times 5.44 \times 10^{-14}\,C^2}{(1.77 \times 10^{-2}\,m)^2} = 1.56\ N$$

Example-3 Suppose the magnitude of the electric force between two electrons is $2.3x10^{-26}$ N. What is the distance r between the two electrons? (Take charge of an electron as $-e = -1.6x10^{-19}\,c$, and $K = 9x10^9\ Nm^2/C^2$)

Answer: r=0.1m

Example-4

Consider three point charges located at the corners of a right triangle as shown in Figure 23.8, where $q_1 = q_3 = 5.0\ \mu C$, $q_2 = -2.0\ \mu C$, and $a = 0.10$ m. Find the resultant force exerted on q_3.

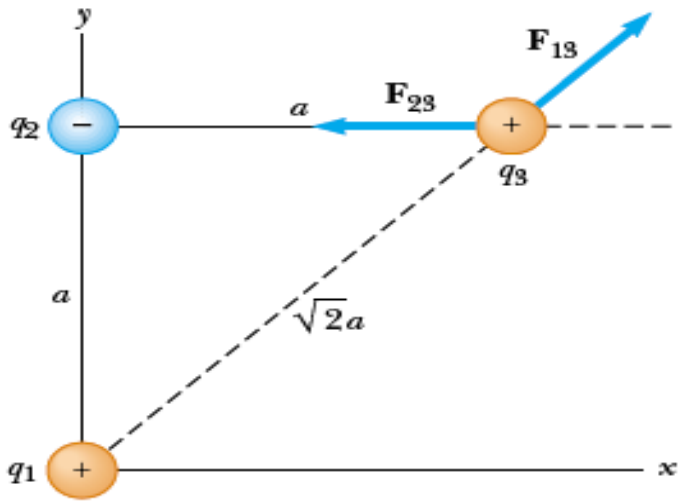

Figure 23.8 (Example 23.2) The force exerted by q_1 on q_3 is $\mathbf{F}_{13}$. The force exerted by q_2 on q_3 is $\mathbf{F}_{23}$. The resultant force $\mathbf{F}_3$ exerted on q_3 is the vector sum $\mathbf{F}_{13} + \mathbf{F}_{23}$.

Solution First, note the direction of the individual forces exerted by q_1 and q_2 on q_3. The force $\mathbf{F}_{23}$ exerted by q_2 on q_3 is attractive because q_2 and q_3 have opposite signs. The force $\mathbf{F}_{13}$ exerted by q_1 on q_3 is repulsive because both charges are positive.

The magnitude of $\mathbf{F}_{23}$ is

$$F_{23} = k_e \frac{|q_2||q_3|}{a^2}$$

$$= (8.99 \times 10^9\ \mathrm{N \cdot m^2/C^2}) \frac{(2.0 \times 10^{-6}\ \mathrm{C})(5.0 \times 10^{-6}\ \mathrm{C})}{(0.10\ \mathrm{m})^2}$$

$$= 9.0\ \mathrm{N}$$

In the coordinate system shown in Figure 23.8, the attractive force $\mathbf{F}_{23}$ is to the left (in the negative x direction).

The magnitude of the force $\mathbf{F}_{13}$ exerted by q_1 on q_3 is

$$F_{13} = k_e \frac{|q_1||q_3|}{(\sqrt{2}a)^2}$$

$$= (8.99 \times 10^9\ \mathrm{N \cdot m^2/C^2}) \frac{(5.0 \times 10^{-6}\ \mathrm{C})(5.0 \times 10^{-6}\ \mathrm{C})}{2(0.10\ \mathrm{m})^2}$$

$$= 11\ \mathrm{N}$$

The repulsive force $\mathbf{F}_{13}$ makes an angle of 45° with the x axis. Therefore, the x and y components of $\mathbf{F}_{13}$ are equal, with magnitude given by $F_{13} \cos 45° = 7.9$ N.

Combining $\mathbf{F}_{13}$ with $\mathbf{F}_{23}$ by the rules of vector addition, we arrive at the x and y components of the resultant force acting on q_3:

$$F_{3x} = F_{13x} + F_{23x} = 7.9\ \mathrm{N} + (-9.0\ \mathrm{N}) = -1.1\ \mathrm{N}$$

$$F_{3y} = F_{13y} + F_{23y} = 7.9\ \mathrm{N} + 0 = 7.9\ \mathrm{N}$$

We can also express the resultant force acting on q_3 in unit-vector form as

$$\mathbf{F}_3 = (-1.1\hat{\mathbf{i}} + 7.9\hat{\mathbf{j}})\ \mathrm{N}$$

What If? **What if the signs of all three charges were changed to the opposite signs? How would this affect the result for $\mathbf{F}_3$?**

Answer The charge q_3 would still be attracted toward q_2 and repelled from q_1 with forces of the same magnitude. Thus, the final result for $\mathbf{F}_3$ would be exactly the same.

Example-5. Three point charges lie along the *x* axis as shown in Fig. below

The positive charge $q_1 = 15.0\ \mu C$ is at $x = 2.00$ m, the positive charge $q_2 = 6.00\ \mu C$ is at the origin, and the resultant force acting on q_3 is zero. What is the x coordinate of q_3?

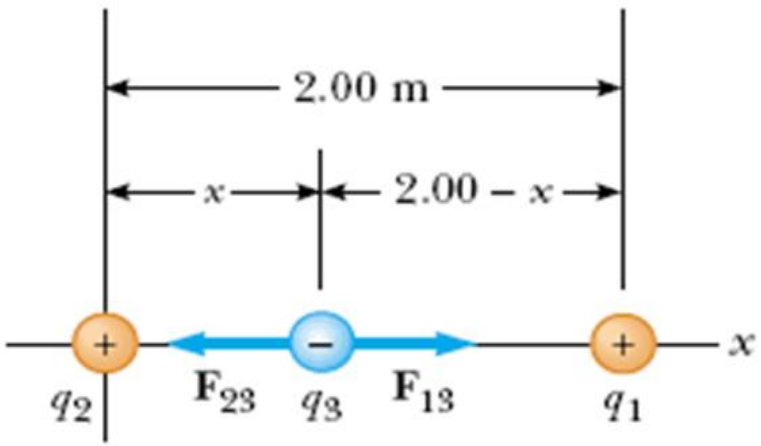

Solution Because q_3 is negative and q_1 and q_2 are positive, the forces $\mathbf{F}_{13}$ and $\mathbf{F}_{23}$ are both attractive, as indicated in Figure 23.9. From Coulomb's law, $\mathbf{F}_{13}$ and $\mathbf{F}_{23}$ have magnitudes

$$F_{13} = k_e \frac{|q_1||q_3|}{(2.00 - x)^2} \qquad F_{23} = k_e \frac{|q_2||q_3|}{x^2}$$

For the resultant force on q_3 to be zero, $\mathbf{F}_{23}$ must be equal in magnitude and opposite in direction to $\mathbf{F}_{13}$. Setting the magnitudes of the two forces equal, we have

$$k_e \frac{|q_2||q_3|}{x^2} = k_e \frac{|q_1||q_3|}{(2.00 - x)^2}$$

Noting that k_e and $|q_3|$ are common to both sides and so can be dropped, we solve for x and find that

$$(2.00 - x)^2|q_2| = x^2|q_1|$$

$$(4.00 - 4.00x + x^2)(6.00 \times 10^{-6}\ \text{C}) = x^2(15.0 \times 10^{-6}\ \text{C})$$

This can be reduced to the following quadratic equation:

$$3.00x^2 + 8.00x - 8.00 = 0$$

Solving this quadratic equation for x, we find that the positive root is $x = 0.775$ m. There is also a second root, $x = -3.44$ m. This is another location at which the magnitudes

N:B.There is also a second root, *x*=3.44 m.
This is another location at which the magnitudes

The Electric Field

- An electric field is a region around which electrostatic force is being experienced by stationary charges
- The concept of an *electric field* is a means of representing the influence of a charge on other, distant charges.

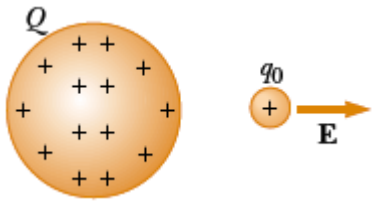

the electric field vector E at a point in space is defined as the electric force $\mathbf{F}_e$ acting on a positive test charge q_0 placed at that point divided by the test charge:

$$\mathbf{E} \equiv \frac{\mathbf{F}_e}{q_0}$$

$$\mathbf{F}_e = q\mathbf{E}$$

- The electric field created by a charge q at a point P at a distance r is given by:

$$\mathbf{E} = k_e \frac{q}{r^2}\,\hat{\mathbf{r}}$$

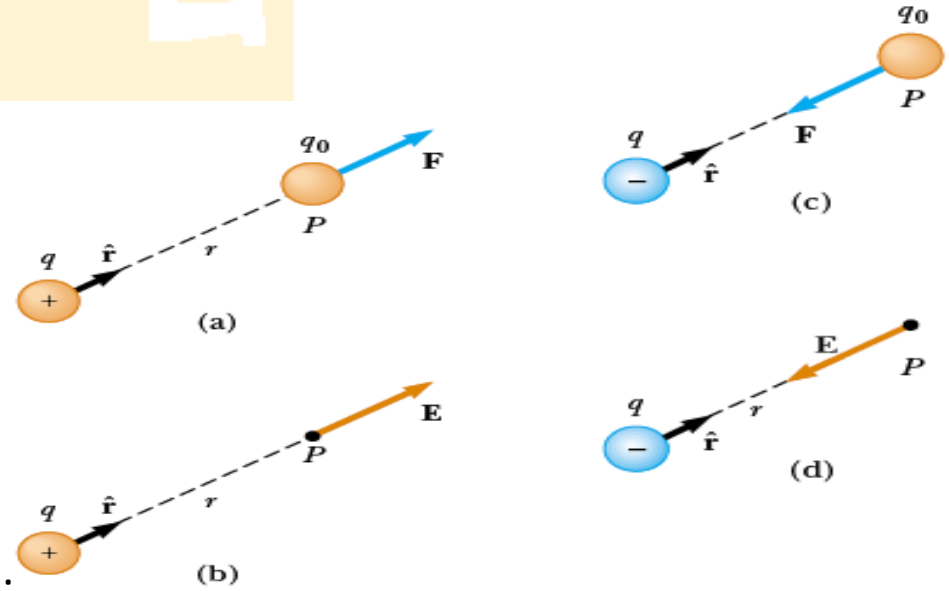

- The electric field at point *P* due to a group of source charges is given by :

$$\mathbf{E} = k_e \sum_i \frac{q_i}{r_i^2}\,\hat{\mathbf{r}}_i$$

where r_i is the distance from the ith source charge q_i to the point P and $\hat{\mathbf{r}}_i$ is a unit vector directed from q_i toward P.

Example -1. **Calculate** the electric field at a distance of 1m from an isolated point particle with a charge of 2nC? E=18N/C

Example -2. **A charge $q_1 = 7.0\mu C$ is located at the origin, and a second charge $q_2 = -5.0\mu C$ is located on the X-axis, 0.30 m from the origin (Fig.). Find the electric field at the point P, which has coordinates (0, 0.40) m.**

Solution:

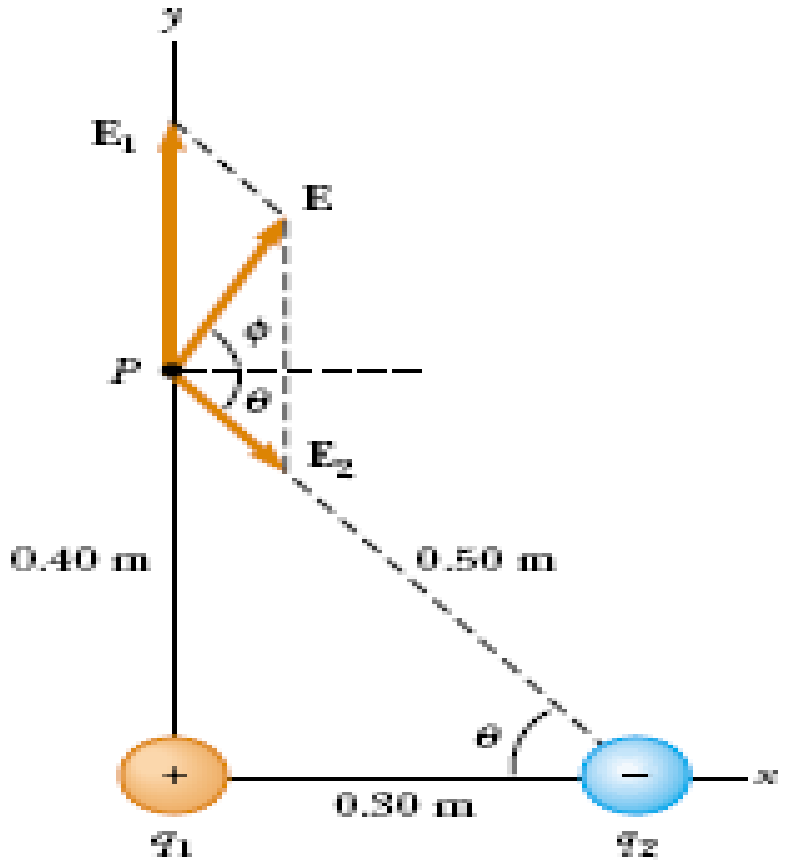

Solution First, let us find the magnitude of the electric field at P due to each charge. The fields $\mathbf{E}_1$ due to the 7.0-μC charge and $\mathbf{E}_2$ due to the -5.0-μC charge are shown in Figure 23.14. Their magnitudes are

$$E_1 = k_e \frac{|q_1|}{r_1^2} = (8.99 \times 10^9\ \mathrm{N \cdot m^2/C^2}) \frac{(7.0 \times 10^{-6}\ \mathrm{C})}{(0.40\ \mathrm{m})^2}$$
$$= 3.9 \times 10^5\ \mathrm{N/C}$$

$$E_2 = k_e \frac{|q_2|}{r_2^2} = (8.99 \times 10^9\ \mathrm{N \cdot m^2/C^2}) \frac{(5.0 \times 10^{-6}\ \mathrm{C})}{(0.50\ \mathrm{m})^2}$$
$$= 1.8 \times 10^5\ \mathrm{N/C}$$

The vector $\mathbf{E}_1$ has only a y component. The vector $\mathbf{E}_2$ has an x component given by $E_2 \cos\theta = \frac{3}{5}E_2$ and a negative y component given by $-E_2 \sin\theta = -\frac{4}{5}E_2$. Hence, we can express the vectors as

$$\mathbf{E}_1 = 3.9 \times 10^5 \hat{\mathbf{j}}\ \mathrm{N/C}$$
$$\mathbf{E}_2 = (1.1 \times 10^5 \hat{\mathbf{i}} - 1.4 \times 10^5 \hat{\mathbf{j}})\ \mathrm{N/C}$$

The resultant field $\mathbf{E}$ at P is the superposition of $\mathbf{E}_1$ and $\mathbf{E}_2$:

$$\mathbf{E} = \mathbf{E}_1 + \mathbf{E}_2 = (1.1 \times 10^5 \hat{\mathbf{i}} + 2.5 \times 10^5 \hat{\mathbf{j}})\ \mathrm{N/C}$$

From this result, we find that $\mathbf{E}$ makes an angle ϕ of 66° with the positive x axis and has a magnitude of 2.7×10^5 N/C.

Exercise

1. Four point charges are located at the corners of a square. Each charge has magnitude 3.2 nC and the square has sides of length 2.00 cm. Find the magnitude of the electric field at the center of the square.

2. Three charges are at the corners of an equilateral triangle, as shown in figure below. Calculate the electric field at a point midway between the two charges on the *x* - axis ?

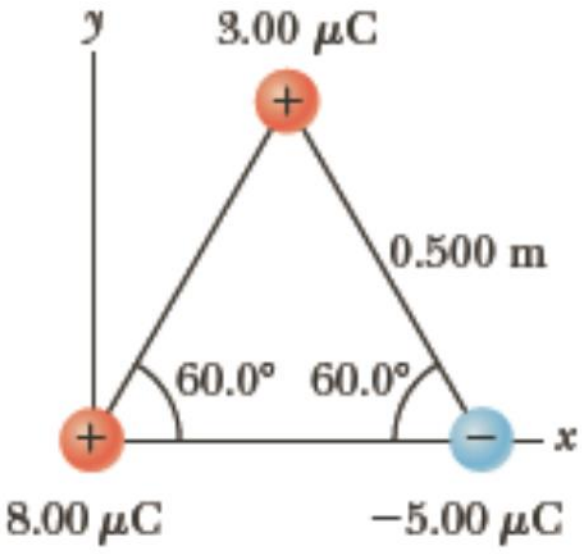

3. a) Determine the magnitude and direction of the electric field at the location of charge q.

(b) What is the resultant force on q?

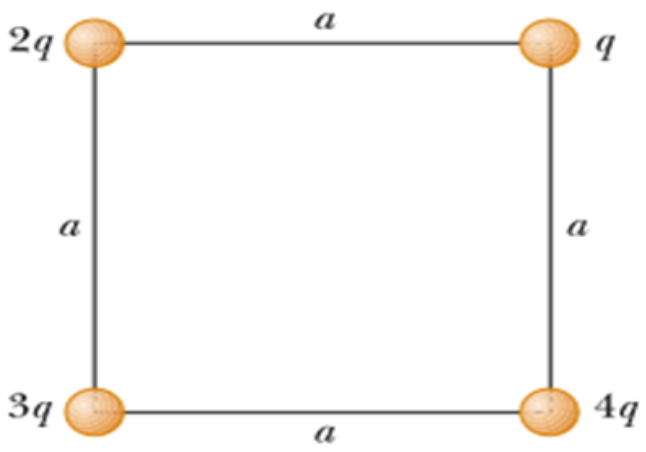

Electric Potential Energy (U)

- It is the amount of work that must be done to bring or assemble a system of point charges or a charge from infinity to a given point and form some configuration.

i.e. U=W

- the electrical potential energy of any two systems of charges q_1 and q_2 is separated by a distance r_{12} is given by:

$$U_{12} = \frac{1}{4\pi\varepsilon_0}\frac{q_1 q_2}{r_{12}}$$

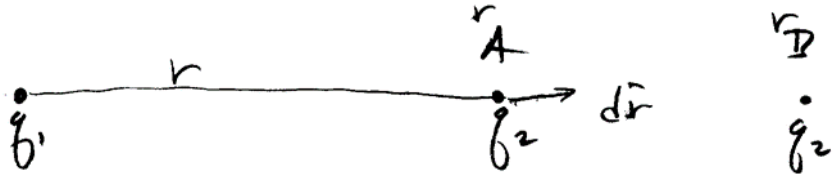

- So the quantity U_{12} is the amount of work done on the two charges to bring them from infinity to the separation r_{12}
- For systems of charges, more than two, $q_1, q_2, q_3, \ldots, q_n$, the electric potential energy is given by:

$$U = \sum_{i,j}^{n} \frac{1}{4\pi\varepsilon_0}\left(\frac{q_i q_j}{r_{ij}}\right)$$

(superposition principle): the potential energy of a system of multiple charges is the sum of the potential energies of the individual pairs.

N:B. The sign of the charges will not be ignored if the charges are negative.

Example-1. Find the electric potential energy in assembling four charges at the vertices of a square of side 1.0 cm, starting each charge from infinity as shown in the figure below

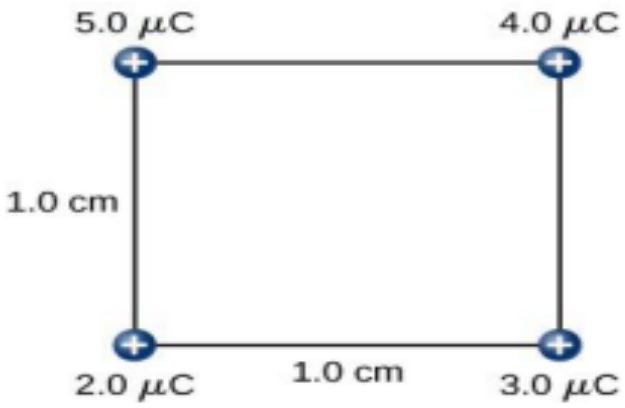

Solution:

From the formula of electric potential energy of systems of charges above,

$$U = \sum_{i,j}^{n} \frac{1}{4\pi\varepsilon_0}\left(\frac{q_i q_j}{r_{ij}}\right)$$

$$= \frac{1}{4\pi\varepsilon_0}\left[\left(\frac{q_1q_2}{r_{12}} + \frac{q_1q_3}{r_{13}} + \frac{q_1q_4}{r_{14}} + \frac{q_2q_3}{r_{23}} + \frac{q_2q_4}{r_{24}} + \frac{q_3q_4}{r_{34}}\right)\right]$$

$$= \frac{1}{4\pi \times 8.85\times10^{-12}}\left[\left(\frac{5x2}{1\times10^{-2}} + \frac{5\times4}{1\times10^{-2}} + \frac{5\times3}{\sqrt{(1\times10^{-2})(1\times10^{-2})}} + \frac{4\times3}{1\times10^{-2}} + \frac{4\times2}{\sqrt{(1\times10^{-2})(1\times10^{-2})}} + \frac{3\times2}{1\times10}\right)\times10^{-9}\right]$$

U = 57.8J

Example-2. Show that the amount of work required to assemble four identical point charges, each of magnitude **q** at the four corners of a square of side length **s** is given by $\frac{5.41kq^2}{s}$

SOLUTION

$$U = U_1 + U_2 + U_3 + U_4$$

$$U = 0 + U_{12} + (U_{13} + U_{23}) + (U_{14} + U_{24} + U_{34})$$

$$U = 0 + \frac{k_e Q^2}{s} + \frac{k_e Q^2}{s}\left(\frac{1}{\sqrt{2}} + 1\right) + \frac{k_e Q^2}{s}\left(1 + \frac{1}{\sqrt{2}} + 1\right)$$

$$U = \frac{k_e Q^2}{s}\left(4 + \frac{2}{\sqrt{2}}\right) = \boxed{5.41\frac{k_e Q^2}{s}}$$

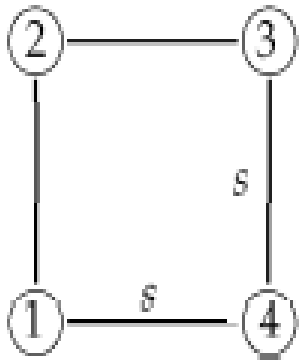

FIG. P25.23

Example 3

Three charges are at the corners of an equilateral triangle, as shown in figure below.

A) Calculate the electric field at a point midway between the two charges on the x – axis (2pts)
B) Calculate the resultant force exerted by the 8μC and -5μC charges on 3μC charge (2pts)
C) Calculate the potential energy due to the charge's distribution (1pt)

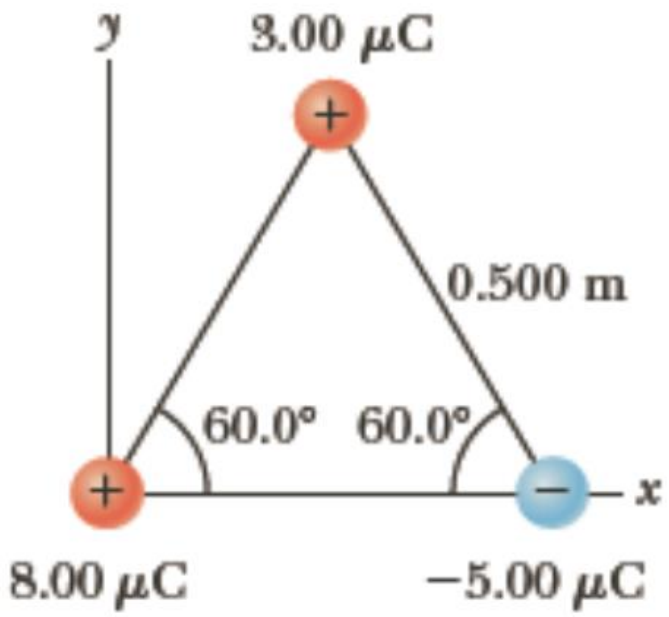

Electric Potential (V)

- It is defined as "the work done (equals the potential energy stored in the field) to bring a charge from infinite separation to the vicinity of another charge divided by the charge that is moved.'

- Is the electric potential energy(U) per unit charge (q).
- Is potential difference V between two points A and B. i.e.

$$\mathbf{V} = \frac{U}{q}$$

$$V = V_B - V_A = \frac{U}{q}$$

- SI Unit of potential difference (Voltage) is Joules per Coulomb called Volt (V)

$$1V = \frac{1J}{C}$$

Example -1. **You have a 12.0-V motorcycle battery that can move 5000 C of charge, and a 12.0-V car battery that can move 60,000 C of charge. How much energy does each deliver?**

Solution. $V = \frac{U}{q} \Rightarrow U = qV \Rightarrow U_1 = q_1 V = (12\text{V x } 5000\text{C}) = 60000\text{J}$

$U_2 = q_2 V = (12\text{V x } 60{,}000\text{C}) = 720{,}000\text{J} = 0.7\text{MJ}$

Example -2. The two charges in Figure below are separated by a distance d=2cm . Find the electric potential at (a) point *A* and (b) point *B*, which is halfway between the charges?

Solution:

a) As the electric potential is a scalar quantity, we have not bother about the direction, but the sign of the charge matters.

Applying equation 911.6),

$$V = \frac{k_e q_1}{r_1} + \frac{k_e q_2}{r_2} = \frac{9.0\times10^9\ Nm^2C^{-2}}{2.0\times10^{-2}\ m}(27-15)\times10^{-9}C = 54.0\ V.$$

b) $$V = \frac{k_e q_1}{d/2} + \frac{k_e q_2}{d/2} = \frac{9.0\times10^9\ Nm^2C^{-2}}{1.0\times10^{-2}\ m}(27-15)\times10^{-9}C = 108.0\ V.$$

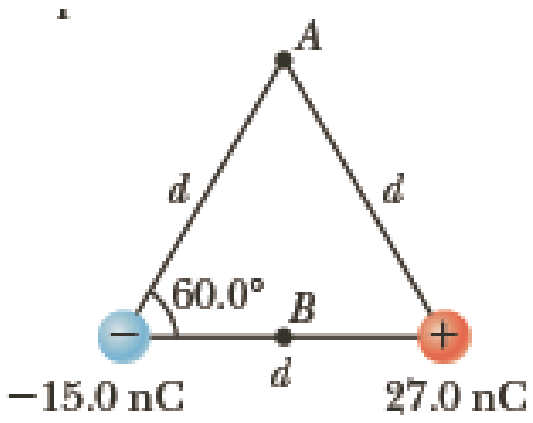

Example 3. Find the total electric potential due to the two charges at the point **P**, whose coordinates are (4, 0) m?

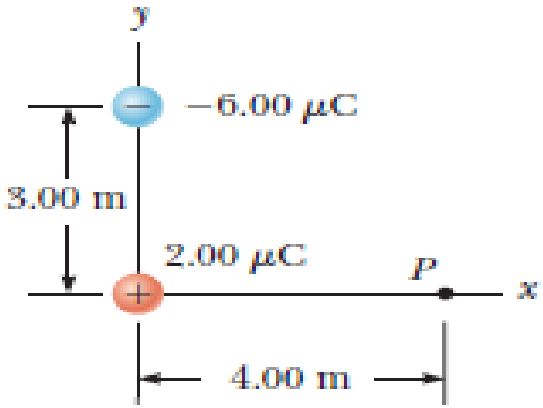

Current, Resistance and Ohm's Law

Current(I):

- is the rate of flow of charges in a given cross-sectional area.

$$I = \frac{\Delta Q}{\Delta t}$$

Where ΔQ is the amount of charge passing through a given area in time Δt.

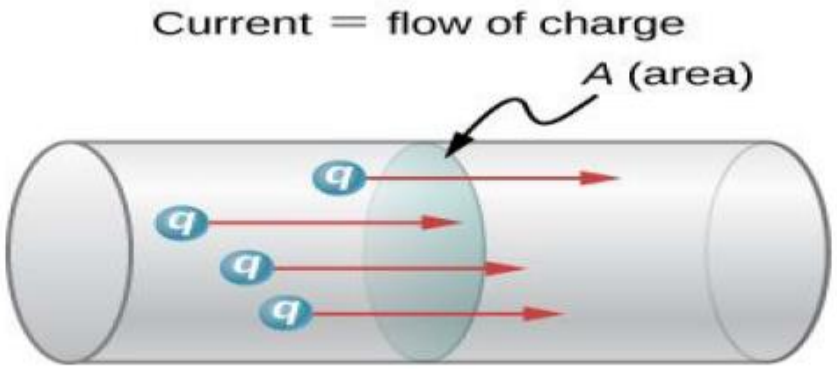

Fig. Current flow in a conductor

- The SI unit for current is the ampere (A), and SI unit of charge is Coulomb (C)

$$1A = \frac{1C}{1s}$$

Examples

1. A small radio receiver uses a battery that delivers a constant current of 0.025A for 3hours. What is the total charge delivered by the battery? (take 1hr =3600 seconds) Ans Q=270C

2. Suppose a student kept her 60W, 120V study lamp turned on from 2pm to 2Am. What is the amount of charge that went through the lamp? Ans Q= 21600C

Ohm's Law

- states that "the voltage applied across the end points of a conductor is proportional to the flow of electric current."

$$V \alpha I \Rightarrow \frac{V}{I} = Contant = Resistance\ (R)$$

$$R = \frac{V}{I} \quad \text{or} \quad V = IR \quad \text{or} \quad I = \frac{V}{R}$$ (Ohm's law)

- SI unit of R = Ohm(Ω): $1\ \Omega = \frac{1V}{1A}$

- Ohm's law also stated as: " the current density $\vec{J}$ is proportional to the electric field $\vec{E}$."

$$\vec{J} = \sigma \vec{E}$$ (Ohm's law)

Where, **σ** is called electrical conductivity, and is a measure of a material's ability to conduct or transmit electricity.

Note: 1. Conductors have a higher electrical conductivity than insulators.

2. SI unit of **σ** is:

$$\sigma = \frac{[J]}{E} = \frac{A/m^2}{V/m} == \frac{A}{Vm} = \frac{1}{\Omega..m}$$

Resistivity (ρ)

- **is a measure of how strongly a material opposes the flow of electrical current.**
- **is the reciprocal of electrical conductivity.**

$$\rho = \frac{1}{\sigma}$$

- SI unit of Resistivity is the Ohm-meter (Ω - m).

Electrical Energy

- the electric force on a charge *q* placed in an electric field E is given by

$$F = Eq$$

- the work W required to move a charge Q in a given electric field E

$$W = Fl, \quad \text{where } l \text{ is the length of the conductor}$$

$$W = Fl = (QE)l = Q(V/l)\,l = QV = U$$

Hence, the power is

$$P = \frac{U}{t} = \frac{QV}{t} = \frac{Q}{t}V = IV = I^2R = \frac{V^2}{R}$$

Example

1. Suppose a 16Ω speaker is connected across the output terminal of a power amplifier that delivers 64W power to it. Calculate the amount of current delivered by the speaker? Ans:I=2A

Equivalent Resistance

1. Resistors in Series

- I = constant. $I_1 = I_2 = \cdots = I_T$
- V_T = sum of each voltages. $V_T = V_1 + V_2 + \cdots V_N$

If N resistors are connected in series, the equivalent resistance is

$$R_{eq} = R_1 + R_2 + R_3 + \ldots R_N = \sum_{i=1}^{N} R_i$$

2. Resistors in Parallel

- I_T = sum of each currents : $I_1 + I_2 + \ldots + I_N$
- V= constant. $V_T = V_1 = V_2 = \cdots = V_N$

  - the equivalent resistance R_{eq} is

$$\frac{1}{R_{eq}} = \frac{1}{R_1} + \frac{1}{R_2} + \frac{1}{R_3} + \cdots \frac{1}{R_N} = \sum_{i=1}^{N}\left(\frac{1}{R_i}\right)$$

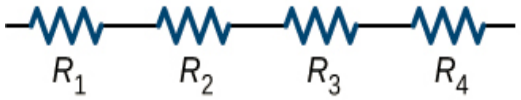

(a) Resistors connected in series

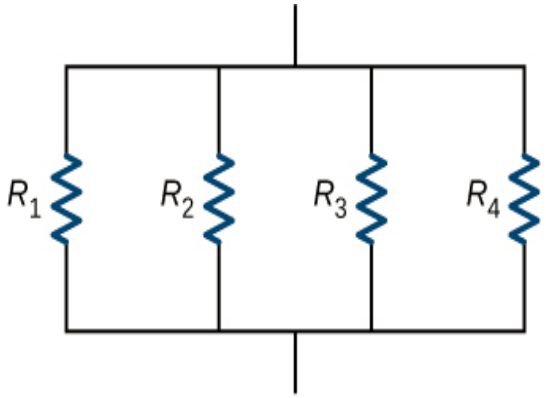

(b) Resistors connected in parallel

Examples

1. Find the equivalent resistance of the circuit that contains four resistors connected in series as shown in the figure below.

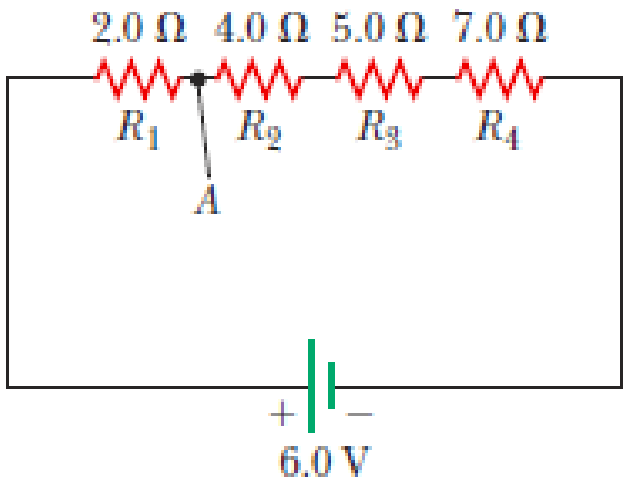

SOLUTION

$$R_{eq} = R_1 + R_2 + R_3 + R_4 = 2.0\ \Omega + 4.0\ \Omega + 5.0\ \Omega + 7.0\ \Omega$$
$$= 18.0\ \Omega$$

2. Find the equivalent resistance of the circuit that contains three resistors connected in parallel as shown in the figure below.

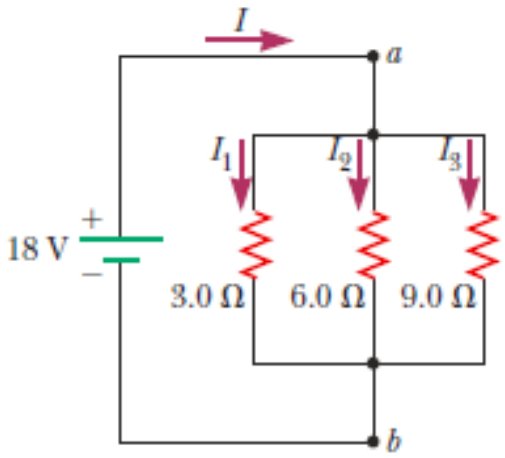

SOLUTION

$$\frac{1}{R_{eq}} = \frac{1}{R_1} + \frac{1}{R_2} + \frac{1}{R_3}$$

$$\frac{1}{R_{eq}} = \frac{1}{3.0\ \Omega} + \frac{1}{6.0\ \Omega} + \frac{1}{9.0\ \Omega} = \frac{11}{18\ \Omega}$$

$$R_{eq} = \frac{18}{11}\ \Omega = 1.6\ \Omega$$

Exercises

1. Find the equivalent resistance between points 1 and 2 of the circuit shown in the figure below.

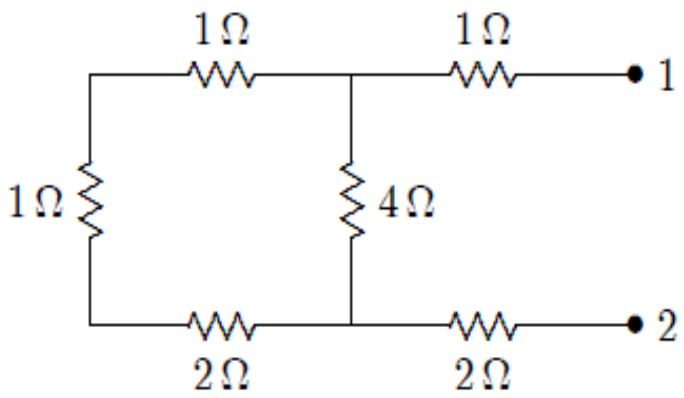

2. Two resistors connected in series have an equivalent resistance of 7Ω. When they are connected in parallel, their equivalent resistance is $\frac{10}{7}\Omega$ What is the resistance of each resistor ?

3. Suppose four 20 Ω resistors are connected in series and the combination is connected to a 20V battery. Calculate the current in any one of the resistors?

4. The current in a circuit loop that has a resistance R_1 is 2.0 A. The current is reduced to 1.6 A when an additional resistor of resistance $R = 3\Omega$ is in series with R_1. What is the value of R_1 ?

Kirchhoff's Circuit Rules

- Kirchhoff's Circuit Laws allow us to solve complex circuit problems by defining a set of basic network laws and theorems for the voltages and currents around a circuit.

1. **Junction Rule/** Kirchhoff's Current Law (KCL)

- states that the "total current or charge entering a junction or node is exactly equal to the charge leaving the node as it has no other place to go except to leave, as no charge is lost within the node"
- is also called Kirchhoff's Current Law (KCL)

In other words the algebraic sum of ALL the currents entering and leaving a node must be equal to zero, $I_{(exiting)} + I_{(entering)} = 0$. This idea by Kirchhoff is commonly known as the **Conservation of Charge**.

$$\Sigma I\text{in} = \Sigma\, I\text{out}.$$

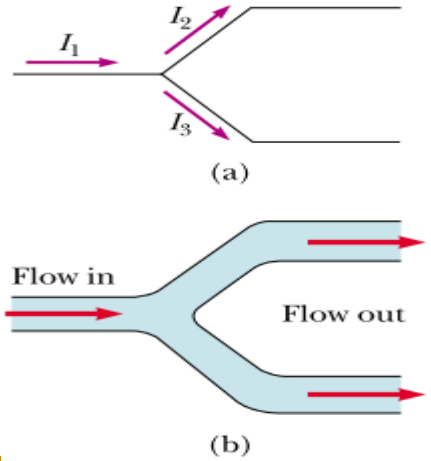

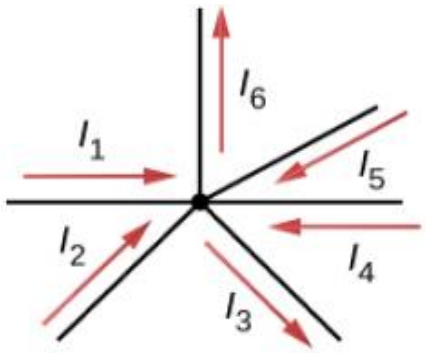

$$\sum I_{in} = \sum I_{out}$$
$$I_1 + I_2 + I_4 + I_5 = I_3 + I_6$$

Currents entering a junction and exiting a junction

2. Loop rule/Kirchhoff's Voltage Law(KVL)

States that "*in any closed loop network, the total voltage around the loop is equal to the sum of all the voltage drops within the same loop*" which is also equal to zero. In other words the algebraic sum of all voltages within the loop must be equal to zero. This idea by Kirchhoff is known as the **Conservation of Energy**.

The algebraic sum of changes in potential around any closed circuit path (loop) must be zero:

$$\Sigma V = 0.$$

➢ Sign conventions

A. In emf(ε):

- **if the direction of the loop , moves from –ve to +ve terminal of emf , then the voltage will be +ve ⇒ + ε**
- **if the direction of the loop , moves from +ve to -ve terminal of emf , then the voltage will be -ve ⇒ - ε**

B. In the external Resisters (R):

- **if the direction of the loop and the direction of current I are:**

- opposite ⇒ the voltage (V) = + IR (Positive)

- the same ⇒ the voltage (V) = - IR (negative)

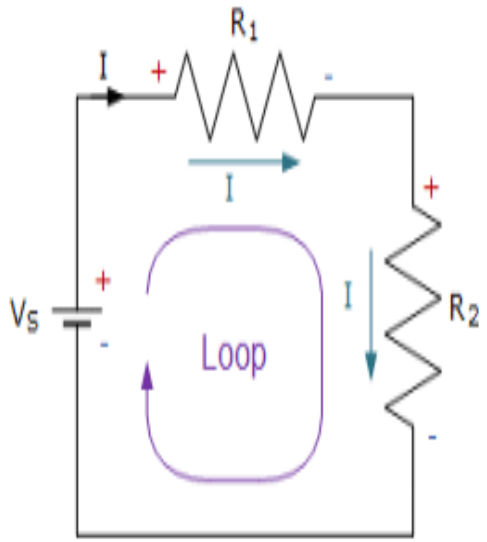

Kirchhoff's loop consisting of two resistors and a voltage source

C. Potential difference between two points ($V_{ab} = V_a - V_b$):

- **Start from point 'b' and move back to 'a', then**

i) for emf (ε):

- if your direction of motion is from –ve terminal of ε **to the** +ve terminal of ε **, then the voltage will be +ve .**
  $\Rightarrow$ **emf = + ε**
- if your direction of motion is from +ve terminal of ε **to the** -ve terminal of ε **, then the voltage will be -ve .**
  $\Rightarrow$ **emf = - ε**

ii) In the external resistors (R):

- if your direction of motion & direction of current I are opposite, **then the voltage will be +ve .**
  $\Rightarrow$ **V = + IR**
- if your direction of motion & direction of current I are same, **then the voltage will be -ve .**
  $\Rightarrow$ **V = - IR**

Note:

- **Any capacitor acts as an open branch in a circuit. i.e the current in the branch containing the capacitor is zero under the steady-state condition.**

Example-1

1. A single-loop circuit contains two resistors and two batteries, as shown in Fig
   (A) Find the current in the circuit.
   (B) What power is delivered to each resistor?
   (C) What power is delivered by the 12-V battery?

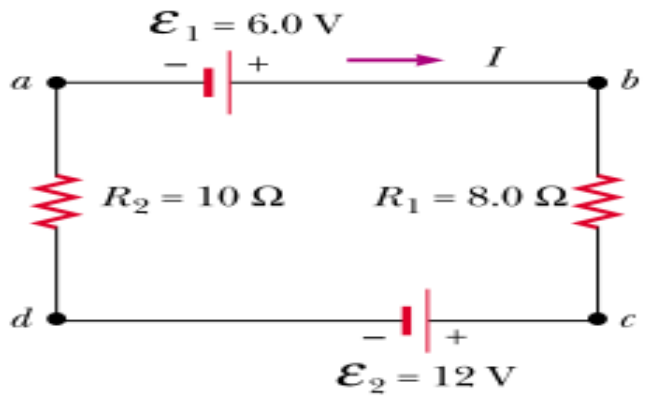

Solution:

A) Assume the direction of the loop is Clockwise:

$$\sum \Delta V = 0$$

$$\mathcal{E}_1 - IR_1 - \mathcal{E}_2 - IR_2 = 0 \quad \Rightarrow \quad I = \frac{\mathcal{E}_1 - \mathcal{E}_2}{R_1 + R_2} = \frac{6.0\text{ V} - 12\text{ V}}{8.0\ \Omega + 10\ \Omega} = -0.33\text{ A}$$

B) Power by Resistors:

$$\mathcal{P}_1 = I^2R_1 = (0.33\text{ A})^2(8.0\ \Omega) = 0.87\text{ W}$$

$$\mathcal{P}_2 = I^2R_2 = (0.33\text{ A})^2(10\ \Omega) = 1.1\text{ W}$$

Hence, the total power delivered to the resistors is $\mathcal{P}_1 + \mathcal{P}_2 = 2.0$ W.

B) Power by emf 2

The 12-V battery delivers power $I\mathcal{E}_2 = 4.0$ W.

Example-2

Find the currents I_1, I_2, and I_3 in the circuit shown in Fig below.

Solution. Assume clockwise loop:

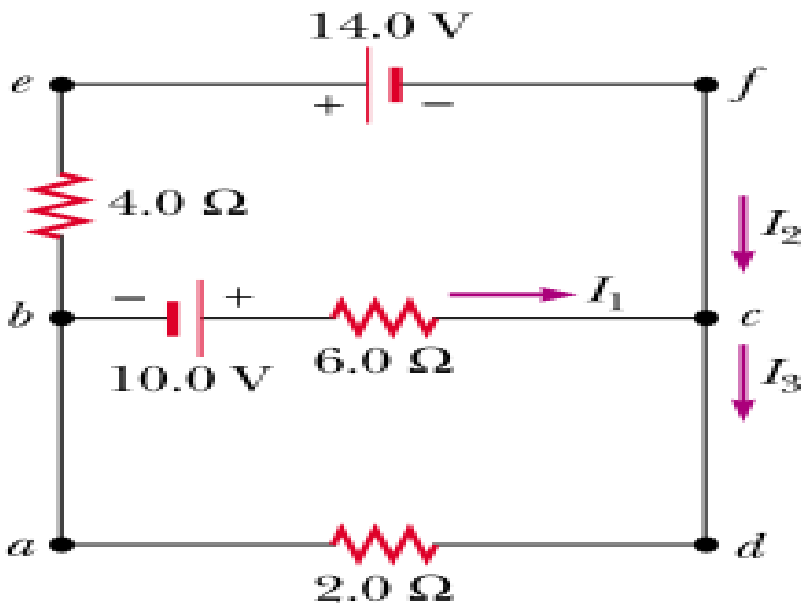

$$(1) \qquad I_1 + I_2 = I_3$$

$$(2) \qquad abcda \quad 10.0\text{ V} - (6.0\ \Omega)I_1 - (2.0\ \Omega)I_3 = 0$$

$$(3) \quad befcb \quad -14.0\text{ V} + (6.0\ \Omega)I_1 - 10.0\text{ V} - (4.0\ \Omega)\ I_2 = 0$$

Substituting Equation (1) into Equation (2) gives

$$10.0\text{ V} - (6.0\ \Omega)I_1 - (2.0\ \Omega)\ (I_1 + I_2) = 0$$

$$(4) \qquad 10.0\text{ V} = (8.0\ \Omega)I_1 + (2.0\ \Omega)I_2$$

Dividing each term in Equation (3) by 2 and rearranging gives

$$(5) \qquad -12.0\text{ V} = -(3.0\ \Omega)I_1 + (2.0\ \Omega)I_2$$

Subtracting Equation (5) from Equation (4) eliminates I_2, giving

$$22.0\text{ V} = (11.0\ \Omega)I_1$$

$$I_1 = \boxed{2.0\text{ A}}$$

Using this value of I_1 in Equation (5) gives a value for I_2:

$$(2.0\ \Omega)I_2 = (3.0\ \Omega)I_1 - 12.0\text{ V}$$
$$= (3.0\ \Omega)(2.0\text{ A}) - 12.0\text{ V} = -6.0\text{ V}$$

$$I_2 = \boxed{-3.0\text{ A}}$$

Finally,

$$I_3 = I_1 + I_2 = \boxed{-1.0\text{ A}}$$

exercises

1. Find the unknown currents I_1, I_2, and I flowing in each branch of the circuit shown in Fig below.

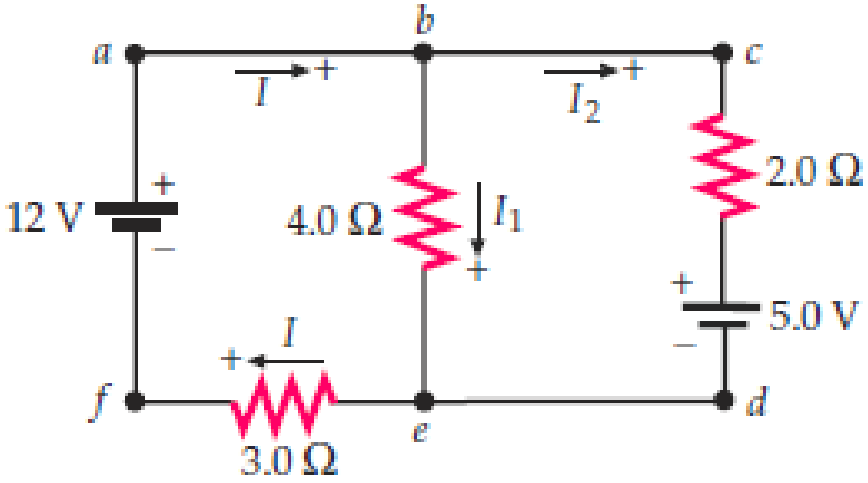

Solution.

1. Apply the junction rule to point *b*:	$I = I_1 + I_2$
2. Apply the loop rule to the outer loop, *abcdefa*:	$-(2.0\ \Omega)I_2 - 5.0\ \text{V} - (3.0\ \Omega)(I_1 + I_2) + 12\ \text{V} = 0$
3. Divide the above equation by 1 Ω, recalling that (1 V)/(1 Ω) = 1 A, then simplify:	$7.0\ \text{A} - 3.0I_1 - 5.0I_2 = 0$
4. For the third condition, apply the loop rule to the loop on the right, *bcdeb*:	$-(2.0\ \Omega)I_2 - 5.0\ \text{V} + (4.0\ \Omega)I_1$ so $-5.0\ \text{V} + 4.0I_1 - 2.0$
5. The results for steps 3 and 4 can be combined to solve for I_1 and I_2. To do so, first multiply the result for step 3 by 2, and then multiply the result for step 4 by −5:	$14\ \text{A} - 6.0I_1 - 10I_2 = 0$ $25\ \text{A} - 20I_1 + 10I_2 = 0$
6. Add the equations in step 5 to eliminate I_2, then solve for I_1;	$39\ \text{A} - 26I_1 = 0$ $I_1 = \frac{39\ \text{A}}{26} = \boxed{1.5\ \text{A}}$
7. Substitute I_1 in the results for step 3 or 4 to solve for I_2:	$7.0\ \text{A} - 3.0(1.5\ \text{A}) - 5.0I_2 = 0$ $I_2 = \frac{2.5\ \text{A}}{5.0} = \boxed{0.50\ \text{A}}$
8. Finally, I_1 and I_2 determine I using the equation in step 1:	$I = I_1 + I_2 = 1.5\ \text{A} + 0.50\ \text{A} = \boxed{2.0\ \text{A}}$

2. **Use Kirchhoff's Rules** find the currents flowing in the circuit in **Figure below**

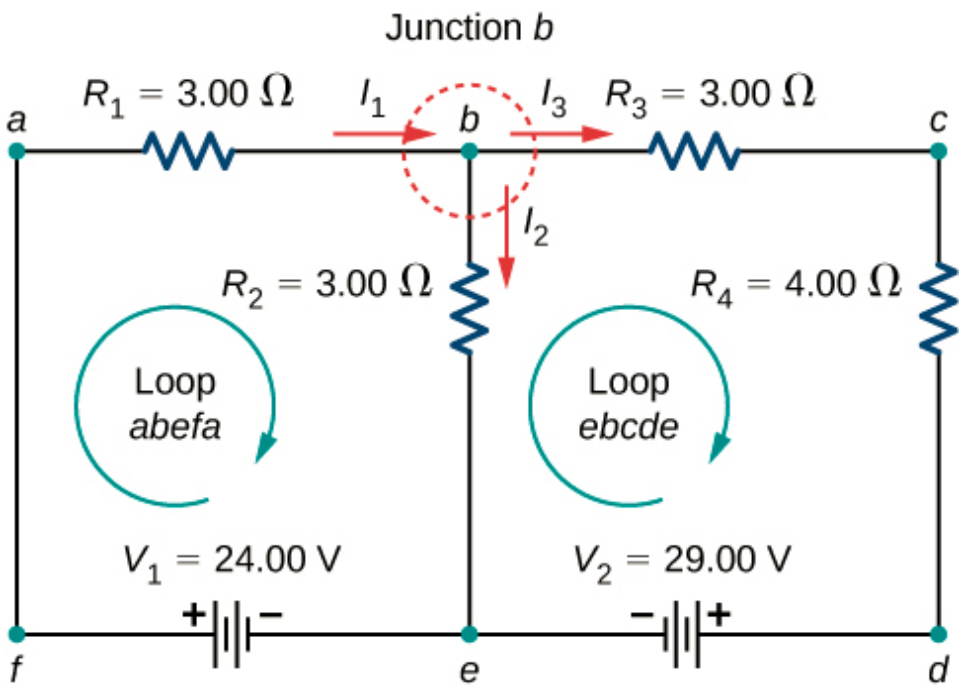

solution.

$$(1)\ \text{Junction } b: I_1 - I_2 - I_3 = 0.$$
$$(2)\ \text{Loop } abefa: \quad I_1 R_1 + I_2 R_2 = V_1.$$
$$(3)\ \text{Loop } ebcde: I_2 R_2 - I_3 (R_3 + R_4) = V_2.$$

To solve the three equations for the three unknown currents, start by eliminating current I_2. First add Eq. (1) times R_2 to Eq. (2). The result is labeled as Eq. (4):

$$(R_1 + R_2) I_1 - R_2 I_3 = V_1.$$
$$(4)\ 6\,\Omega I_1 - 3\,\Omega I_3 = 24\,\text{V}.$$

Next, subtract Eq. (3) from Eq. (2). The result is labeled as Eq. (5):

$$I_1 R_1 + I_3 (R_3 + R_4) = V_1 - V_2.$$
$$(5)\ 3\,\Omega I_1 + 7\,\Omega I_3 = -5\,\text{V}.$$

We can solve Eqs. (4) and (5) for current I_1. Adding seven times Eq. (4) and three times Eq. (5) results in $51\,\Omega I_1 = 153\,\text{V}$, or $I_1 = 3.00\,\text{A}$. Using Eq. (4) results in $I_3 = -2.00\,\text{A}$. Finally, Eq. (1) yields $I_2 = I_1 - I_3 = 5.00\,\text{A}$.

4. Find the currents flowing in the circuit in **Figure below**

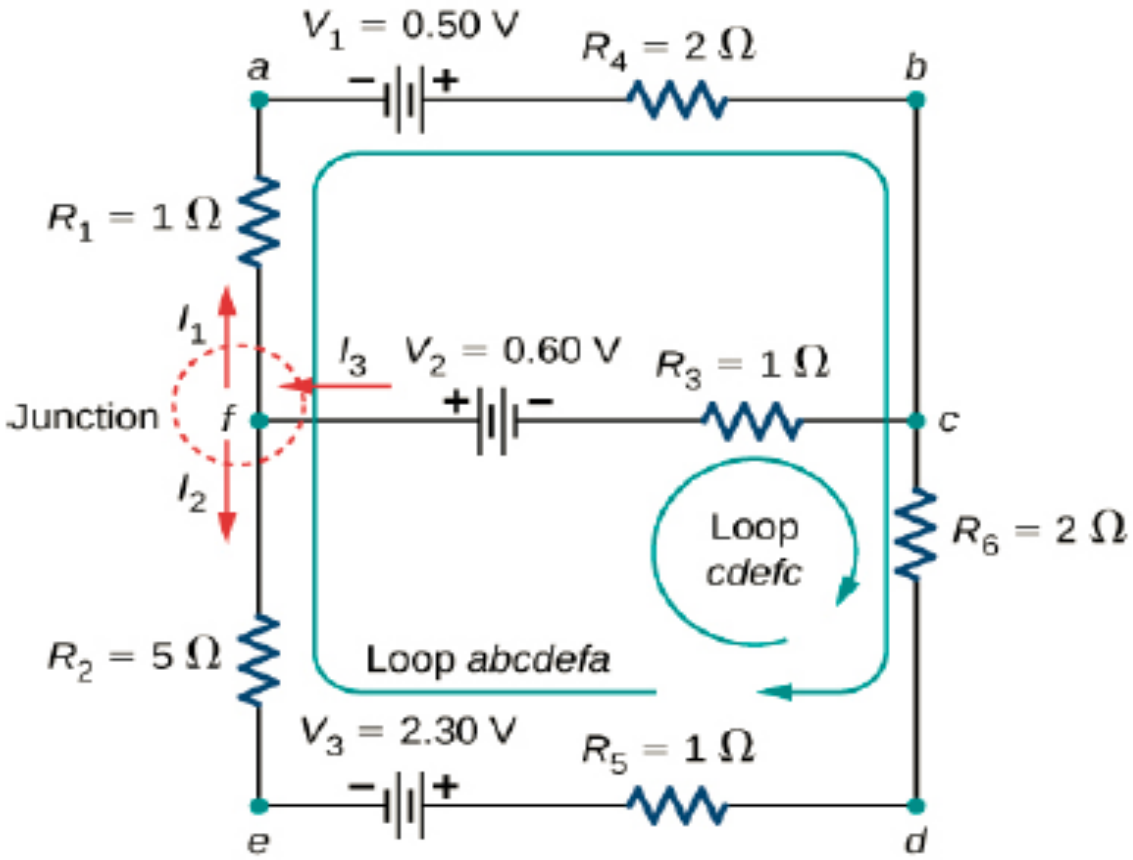

Solution

Applying the junction and loop rules yields the following three equations. We have three unknowns, so three equations are required.

$$\text{Junction } c: \; I_1 + I_2 = I_3.$$
$$\text{Loop } abcdefa: \; I_1(R_1 + R_4) - I_2(R_2 + R_5 + R_6) = V_1 - V_3.$$
$$\text{Loop } cdefc: \; I_2(R_2 + R_5 + R_6) + I_3 R_3 = V_2 + V_3.$$

Simplify the equations by placing the unknowns on one side of the equations.

$$\text{Junction } c: \; I_1 + I_2 - I_3 = 0.$$
$$\text{Loop } abcdefa: \; I_1(3\,\Omega) - I_2(8\,\Omega) = 0.5\,\text{V} - 2.30\,\text{V}.$$
$$\text{Loop } cdefc: \; I_2(8\,\Omega) + I_3(1\,\Omega) = 0.6\,\text{V} + 2.30\,\text{V}.$$

Simplify the equations. The first loop equation can be simplified by dividing both sides by 3.00. The second loop equation can be simplified by dividing both sides by 6.00.

$$\text{Junction } c: \; I_1 + I_2 - I_3 = 0.$$
$$\text{Loop } abcdefa: \; I_1(3\,\Omega) - I_2(8\,\Omega) = -1.8\,\text{V}.$$
$$\text{Loop } cdefc: \; I_2(8\,\Omega) + I_3(1\,\Omega) = 2.9\,\text{V}.$$

The results are

$$I_1 = 0.20\,\text{A}, \quad I_2 = 0.30\,\text{A}, \quad I_3 = 0.50\,\text{A}.$$

20. The ammeter shown in Figure P28.20 reads 2.00 A. Find I_1, I_2, and $\mathcal{E}$.

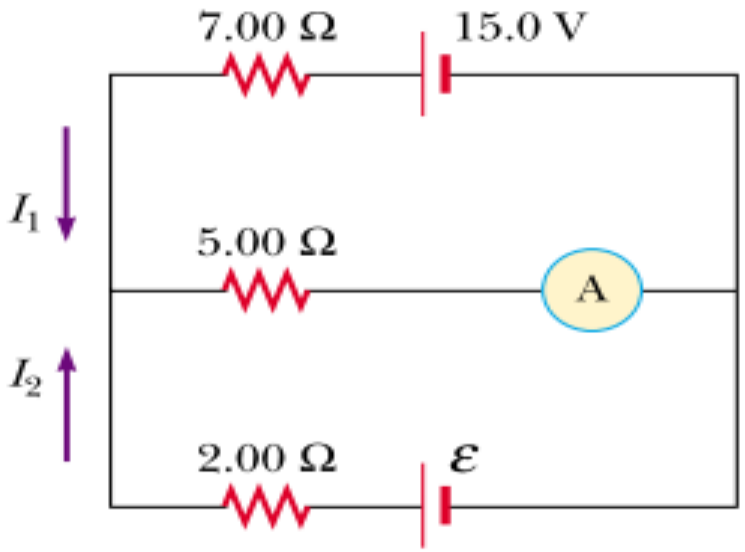

Figure P28.20

21. Determine the current in each branch of the circuit shown in Figure P28.21.

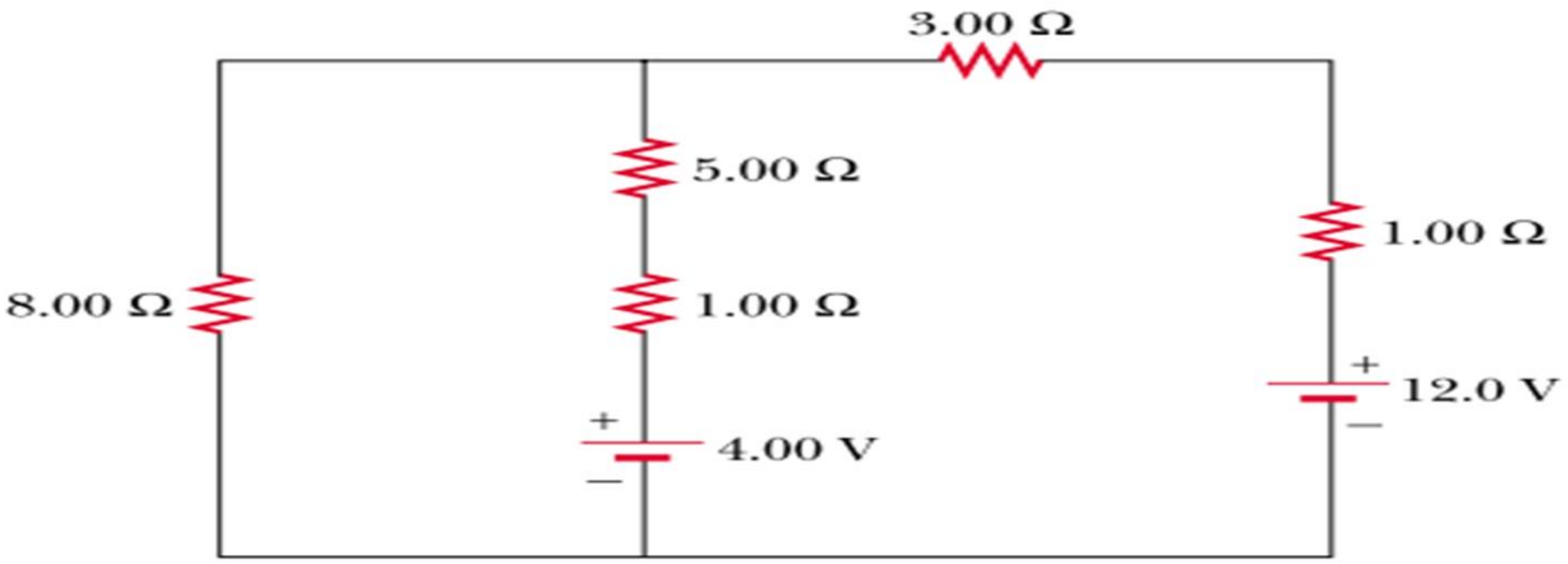

27. A dead battery is charged by connecting it to the live battery of another car with jumper cables (Fig. P28.27). Determine the current in the starter and in the dead battery.

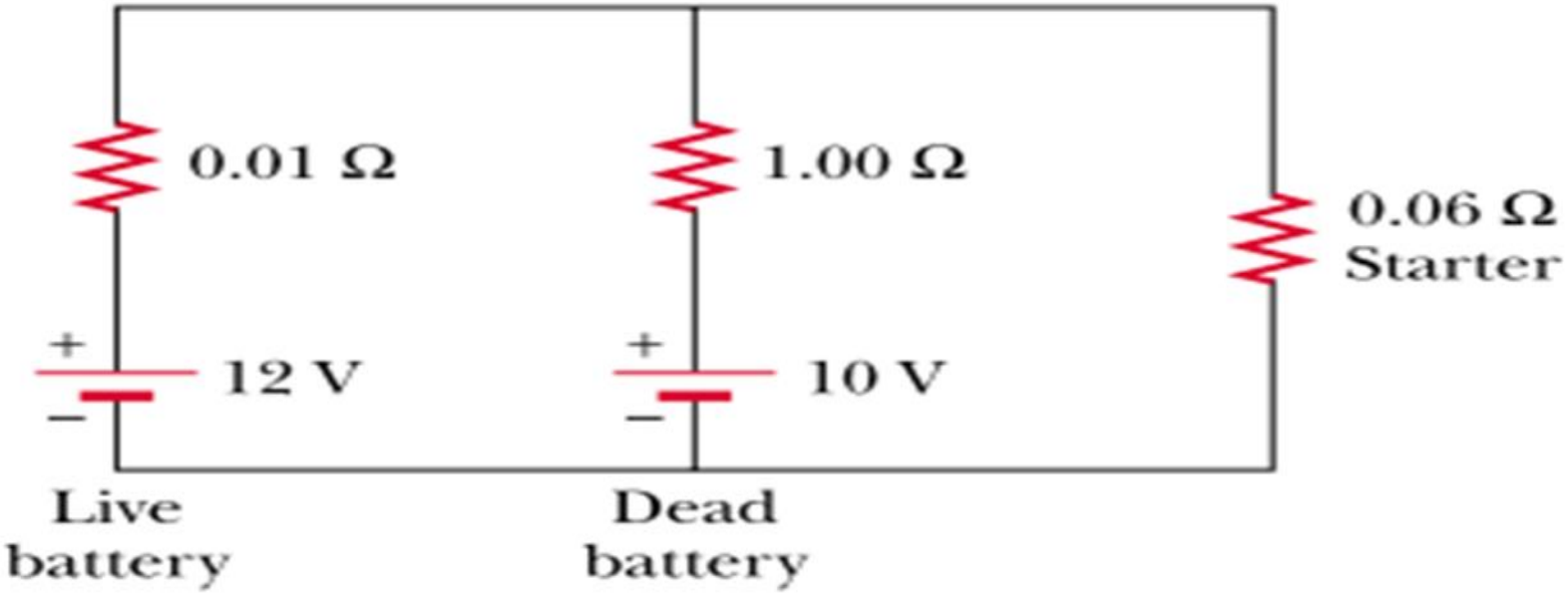

Figure P28.27

Magnetic Field and Magnetic Flux

Definition: Magnetic Field

- Is a region where magnetic force is felt by a moving charge.
- **A magnetic** field is defined by the force that a charged particle experiences moving in this field, after we account for the gravitational and any additional electric forces possible on the charge.
- The magnitude of this force is proportional to the amount of charge **q**, the speed of the charged particle **v**, and the magnitude of the applied magnetic field **B**. And is given by:

$$\vec{F} = q\vec{V} \times \vec{B} \qquad \Rightarrow \qquad F = qvB\sin\theta$$

✓ Where, θ is the angle between the velocity and the magnetic field.

✓ The SI unit for magnetic field strength B is called the tesla (T)

A smaller unit, called the gauss (G), where $1G = 1 \times 10^{-4}T$, is sometimes used.

Note: The direction of this force is perpendicular to both the direction of the moving charged particle and the direction of the applied magnetic field.

Example-1:

An alpha-particle $(q = 3.2 \times 10^{-19}\,\text{C})$ moves through a uniform magnetic field whose magnitude is 1.5 T. The field is directly parallel to the positive z-axis of the rectangular coordinate system. What is the magnetic force on the alpha-particle when it is moving (a) in the positive x-direction with a speed of 5.0×10^4 m/s? (b) in the negative y-direction with a speed of 5.0×10^4 m/s? (c) in the positive z-direction with a speed of 5.0×10^4 m/s? (d) with a velocity $\vec{\mathbf{v}} = \left(2.0\,\hat{\mathbf{i}} - 3.0\,\hat{\mathbf{j}} + 1.0\hat{\mathbf{k}}\right) \times 10^4$ m/s?

Solution

a. First, to determine the direction, start with your fingers pointing in the positive x-direction. Sweep your fingers upward in the direction of magnetic field. Your thumb should point in the negative y-direction. This should match the mathematical answer. To calculate the force, we use the given charge, velocity, and magnetic field and the definition of the magnetic force in cross-product form to calculate:

$$\vec{\mathbf{F}} = q\,\vec{\mathbf{v}} \times \vec{\mathbf{B}} = \left(3.2 \times 10^{-19}\,\text{C}\right)\left(5.0 \times 10^4\,\text{m/s}\ \hat{\mathbf{i}}\right) \times \left(1.5\,\text{T}\ \hat{\mathbf{k}}\right) = -2.4 \times 10^{-14}\,\text{N}\ \hat{\mathbf{j}}.$$

b. First, to determine the directionality, start with your fingers pointing in the negative y-direction. Sweep your fingers upward in the direction of magnetic field as in the previous problem. Your thumb should be open in the negative x-direction. This should match the mathematical answer. To calculate the force, we use the given charge, velocity, and magnetic field and the definition of the magnetic force in cross-product form to calculate:

$$\vec{\mathbf{F}} = q\,\vec{\mathbf{v}} \times \vec{\mathbf{B}} = \left(3.2 \times 10^{-19}\,\text{C}\right)\left(-5.0 \times 10^4\,\text{m/s}\ \hat{\mathbf{j}}\right) \times \left(1.5\,\text{T}\ \hat{\mathbf{k}}\right) = -2.4 \times 10^{-14}\,\text{N}\ \hat{\mathbf{i}}.$$

c. Since the velocity and magnetic field are parallel to each other, there is no orientation of your hand that will result in a force direction. Therefore, the force on this moving charge is zero. This is confirmed by the cross product. When you cross two vectors pointing in the same direction, the result is equal to zero.

d. First, to determine the direction, your fingers could point in any orientation; however, you must sweep your fingers upward in the direction of the magnetic field. As you rotate your hand, notice that the thumb can point in any x- or y-direction possible, but not in the z-direction. This should match the mathematical answer. To calculate the force, we use the given charge, velocity, and magnetic field and the definition of the magnetic force in cross-product form to calculate:

$$\begin{aligned}\vec{\mathbf{F}} &= q\,\vec{\mathbf{v}} \times \vec{\mathbf{B}} = \left(3.2\times 10^{-19}\,\mathrm{C}\right)\left(\left(2.0\,\hat{\mathbf{i}} - 3.0\,\hat{\mathbf{j}} + 1.0\hat{\mathbf{k}}\right)\times 10^{4}\,\mathrm{m/s}\right)\times\left(1.5\,\mathrm{T}\,\hat{\mathbf{k}}\right)\\ &= \left(-14.4\,\hat{\mathbf{i}} - 9.6\,\hat{\mathbf{j}}\right)\times 10^{-15}\,\mathrm{N}.\end{aligned}$$

This solution can be rewritten in terms of a magnitude and angle in the xy-plane:

$$\begin{aligned}\left|\vec{\mathbf{F}}\right| &= \sqrt{F_x^2 + F_y^2} = \sqrt{(-14.4)^2 + (-9.6)^2}\times 10^{-15}\,\mathrm{N} = 1.7\times 10^{-14}\,\mathrm{N}\\ \theta &= \tan^{-1}\left(\frac{F_y}{F_x}\right) = \tan^{-1}\left(\frac{-9.6\times 10^{-15}\,\mathrm{N}}{-14.4\times 10^{-15}\,\mathrm{N}}\right) = 34^\circ.\end{aligned}$$

Example-2: A proton moves with a speed of 4.0×10^6 ms^{-1} along the x-axis. It enters a region where there is a magnetic field of magnitude 5.0 T, directed at an angle of 60^0 to the x-axis and lying in the xy plane. What is the magnitude of magnetic force acting on the proton? (take charge of proton as 1.6×10^{19} c)

Example-3: A proton moves with a velocity of **v = (2i - 4j + k)** m/s in a region in which the magnetic field is **B = (i + 2j - 3k) T. calculate** he magnetic force experienced by the proton(take charge of proton as 1.6×10^{19} c)

The magnetic flux (Φ)

- can be visualized as the number of magnetic field lines passing through a given area.
- The number of magnetic field lines per unit area, i.e. B, is then referred to as the density of the magnetic flux or, more properly, the magnetic flux density.

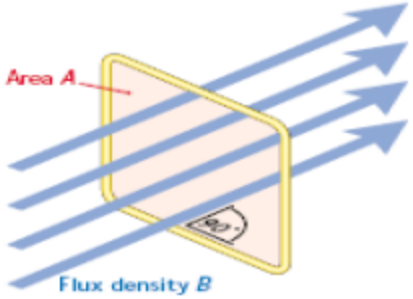

$$\Phi = BA$$

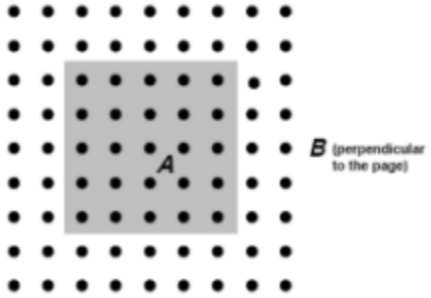

Figure Magnetic flux through a loop of area A

Electromagnetic Induction

- Electromagnetic induction occurs when an emf is induced in a coil due to a changing magnetic flux. This is known as Faraday's Law of Electromagnetic Induction.
- Movement of a magnet relative to a coil produces emfs. The same emfs are produced if the coil is moved relative to the magnet
- Electromotive force of opposite signs are produced by motion in opposite directions and the directions of emfs are also reversed by reversing poles. The same results are produced if the coil is moved rather than the magnet; it is the relative motion that is important.

The Laws of Electromagnetic Induction

1. **Faraday's Law of Induction:** states that the size of the emf induced in a circuit is directly proportional to the rate of change of magnetic flux.
2. **Lenz's Law states:** that "the direction of the induced emf is always such as to oppose the change in magnetic flux producing it."

Or Lenz's law states that "The induced current in a loop is in the direction that creates a magnetic field that opposes the change in magnetic flux through the area enclosed by the loop."

$$Induced emf = -N\frac{\Delta\Phi}{\Delta t}$$

Where N = the number of turns

N:B. the negative sign is due to Lenz's law

Note that Φ_B changes if:

$$\mathcal{E} = -\frac{d}{dt}(BA\cos\theta)$$

1) B changes
2) the area of the circuit changes (dA)
3) the orientation of the circuit changes ($B \cdot dA$)

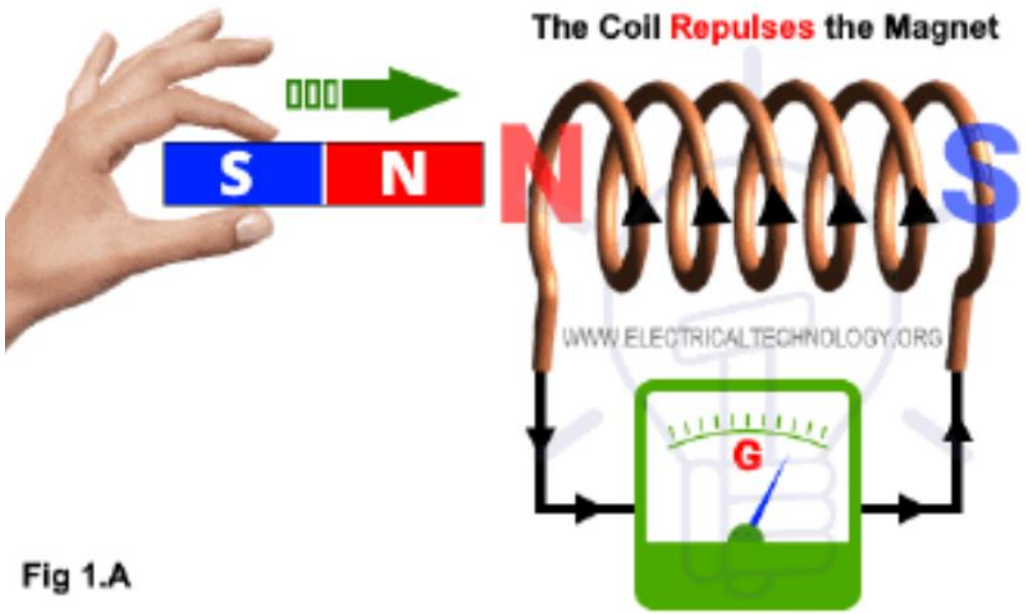

Fig 1.A

When the "N" Pole of the magnet is moved towards the coil, end of the coil becomes "N" Pole.

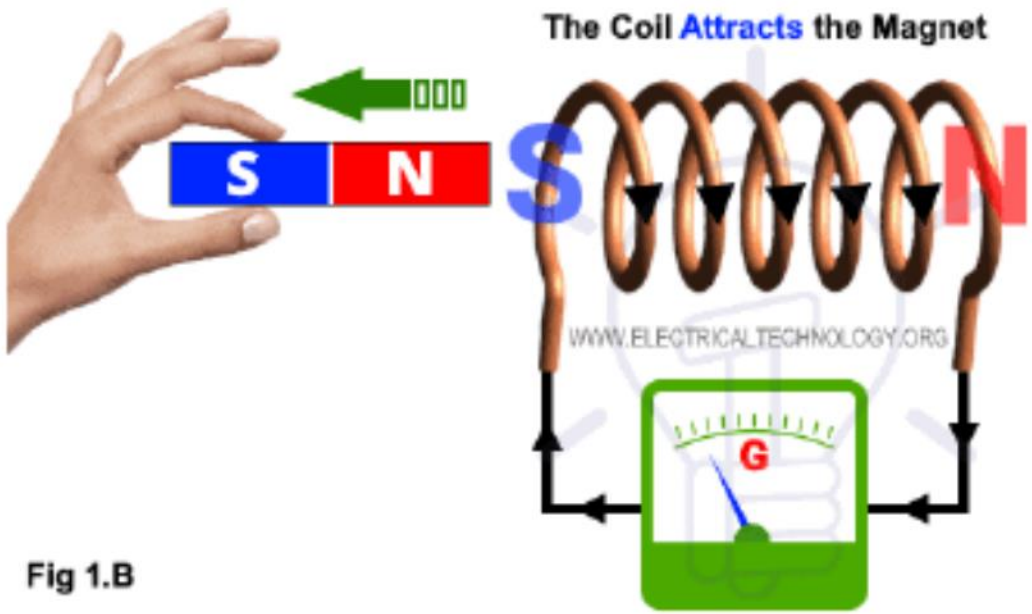

Fig 1.B

When the "N" Poles of the magnet is moved away from the coil, end of the coil becomes "S" Pole.

$$\mathcal{E} = -N\frac{\Delta\Phi}{\Delta t}$$

Example

The square coil of (Figure) has sides l=0.2m long and is tightly wound with N=200 turns of wire. The resistance of the coil is R=5.0Ω. The coil is placed in a spatially uniform magnetic field that is directed perpendicular to the face of the coil and whose magnitude is decreasing at a rate $\frac{\Delta B}{\Delta t} = -0.04T/s$. (a) What is the magnitude of the emf induced in the coil? (b) What is the magnitude of the current circulating through the coil?

Solution:

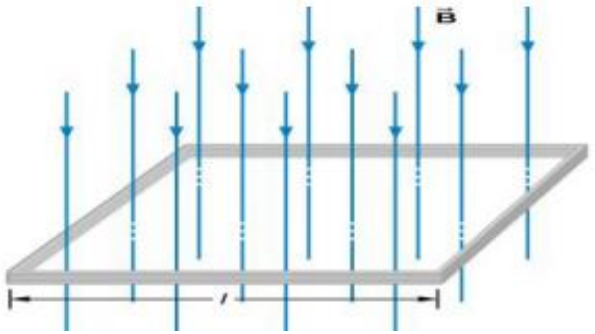

a) The flux through the square loop is given by

$$\Phi = \vec{B} \bullet \vec{A} = Bl^2$$

Then the induced emf from Faraday's law is,

$$\varepsilon = N\frac{\Delta\Phi}{\Delta t} = NA\frac{\Delta B}{\Delta t} = (200)(0.2m)^2(0.04T/s)$$

$$\varepsilon = 0.5\text{V}$$

b) Then the current can calculated from Ohm's law

$$\varepsilon = IR$$

$$I = \frac{\varepsilon}{R} = \frac{0.5V}{5\Omega} = 0.1A$$

The End